990P–3

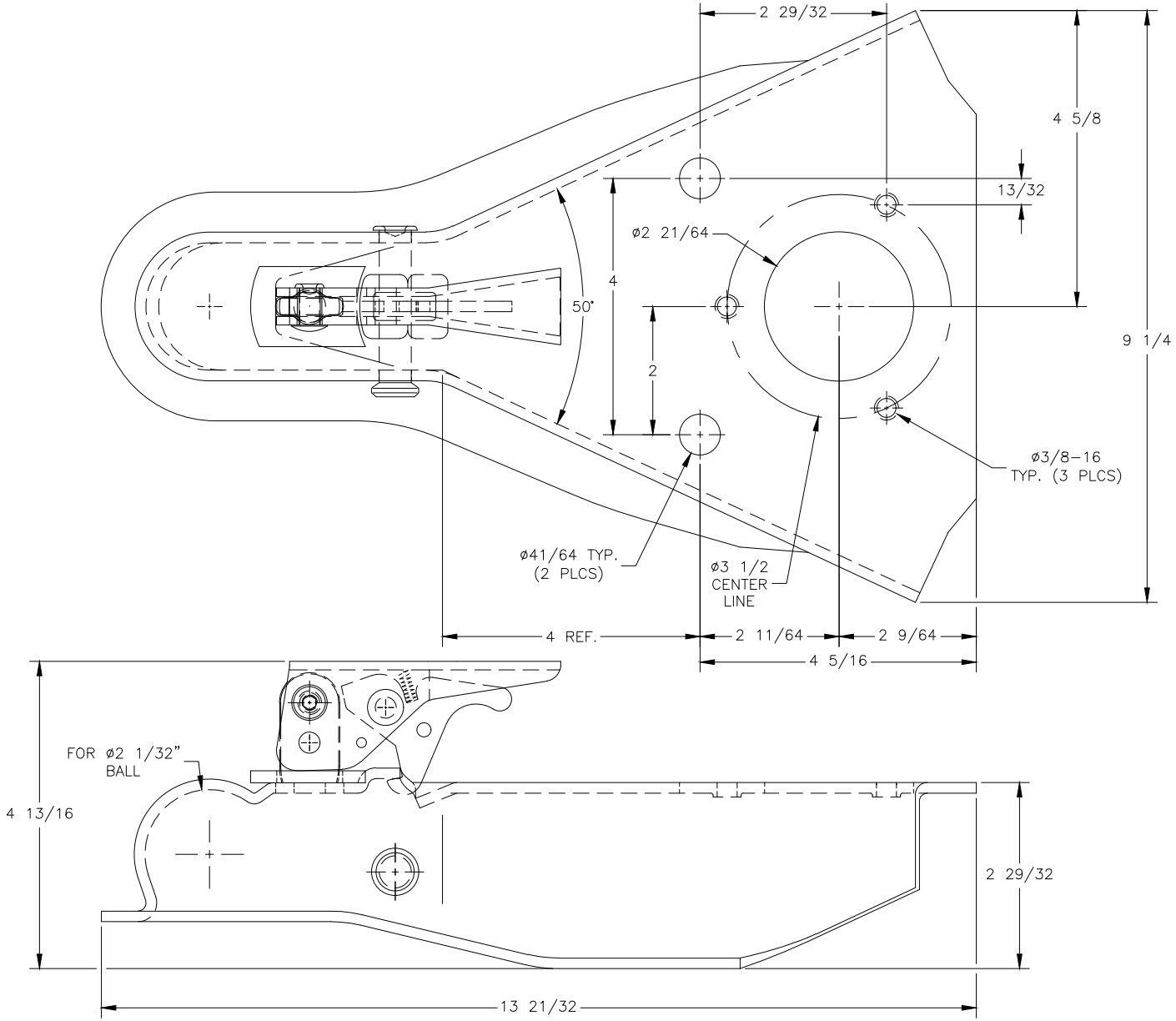
2 29/32
4 5/8
13/32
ø2 21/64
4
50°
2
9 1/4
ø3/8–16
TYP. (3 PLCS)
ø41/64 TYP.
(2 PLCS)
ø3 1/2
CENTER
LINE
4 REF.
2 11/64
2 9/64
4 5/16
FOR ø2 1/32"
BALL
4 13/16
2 29/32
13 21/32